Single Slide Action Up Or Down Movement(Exposed)

GW-430 Friction Stay Series Round Groove

GW-430 Mild Steel stay are four-bar friction stays used for the support and frictional control of projecting side hung & awning windows.

Material: Mild Steel 430

Designed for standard style of side hung windows.

Easily adjust the opening angle by joints.

MATERIAL	Size	Bar	Thick (mm)
430	6"	4 Bar	2.0
202	8"	4 Bar	2.0
304	12"	4 Bar	2.0

Finish: NA/MB/Black/White

Material: Aluminium

GW-70D

GW-70S

GW-228
Aluminium Door Handle

GW-228
Lock+Plate

GW-SHB-4
Single Door lock with key

Finish: Black / White

Material: Zinc Alloy

Packing: 10 Sets/ctn

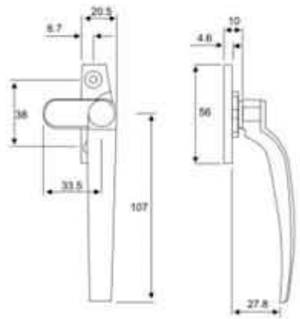

GW-CH-061
Casement Handle

Finish: NA/MB/Black/White

Material: Aluminium

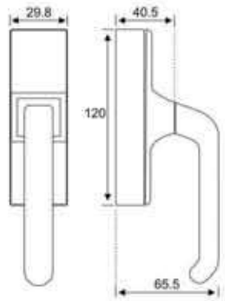

GW-MHD-710
Multipoint Handle

Finish: Black/White

Material: Zinc alloy

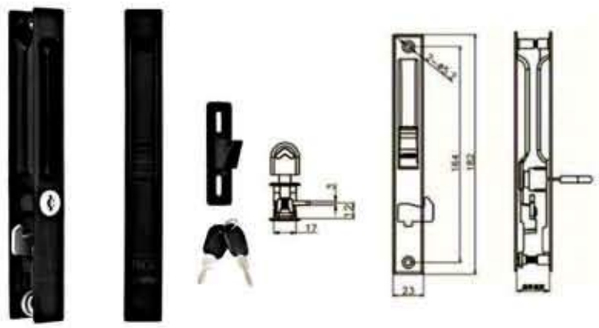

GW-A6
Lock With Key

Size: 25mm/32mm

Finish: NA/MB/Black/White

Material: Zinc alloy